Presented at 69th IEA-FBC Meeting, Sep.25-26, 2014)

Load-following of CaL process

Tadaaki Shimizu
Niigata University
Japan

Reactions in CaL process

CO_2 removal from flue gas by CaO

$CaO + CO_2 \rightarrow CaCO_3$ at 873K (P_{CO2}=0.004 atm)

Exothermic reaction → Steam generation

Regeneration of CaO from $CaCO_3$

$CaCO_3 \rightarrow CaO + CO_2$ at 1223K (P_{CO2}=1.9 atm)

Endothermic reaction → Combustion of fuel by O_2

CaO and $CaCO_3$: solids

Two fluidized bed reactors connected by solid transport lines.

CaL process

Two fluidized bed reactors connected by solid transport lines.

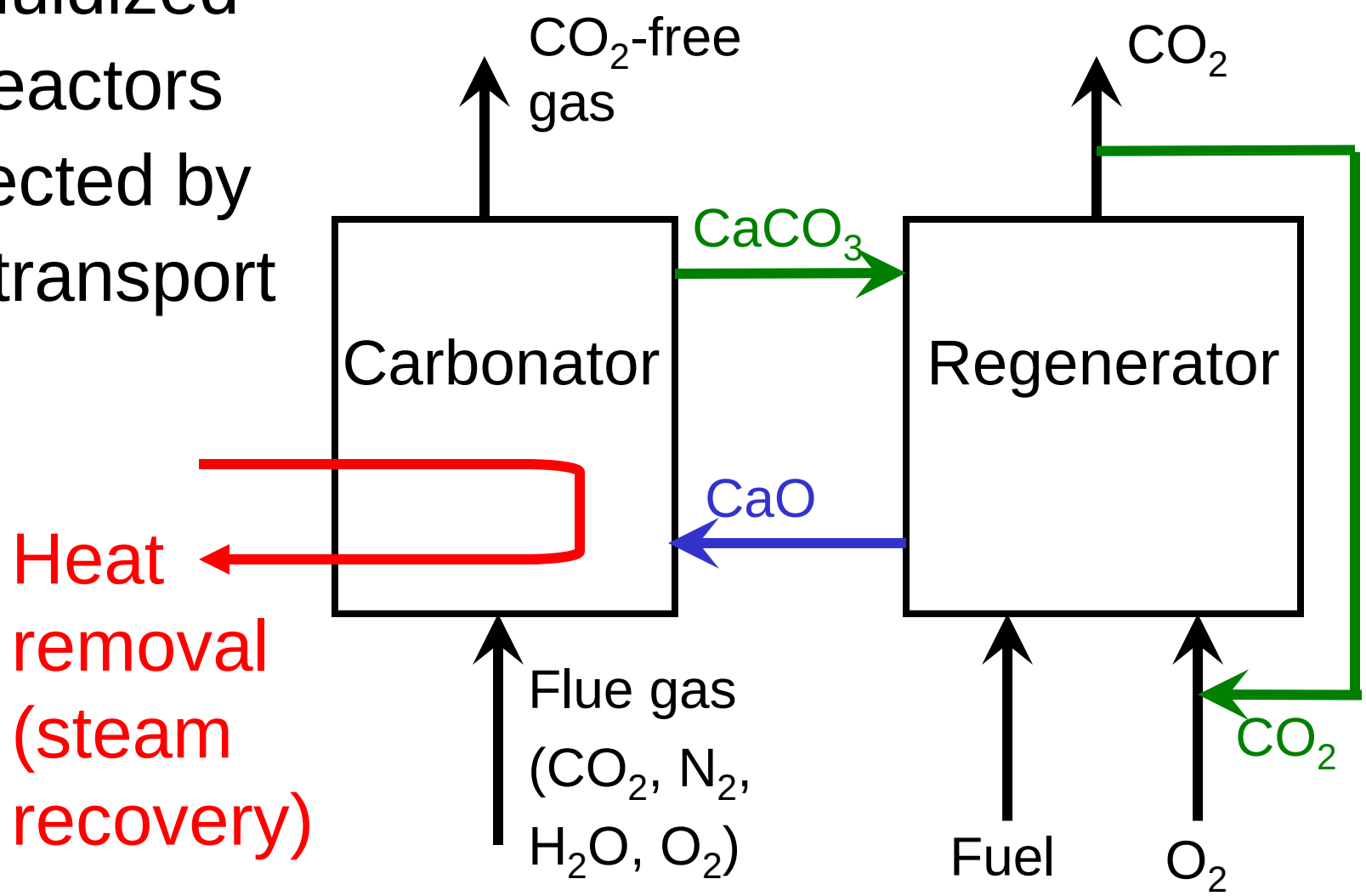

Requirement for load-following ability

"Introduction of solar energy and wind energy are anticipated to affect the stability in grid because they are weather-dependent. So the fuel-fired technologies will be requested to compensate the change in energy supply, i.e., load-following ability is needed to meet the change in demand." (STRATEGY PLAN of IEA FBC Implementing Agreement 2014-2018, 2014)

→CO_2 capture processes are also required to follow the change in flue gas feed rate (change in load of air-blown combustor).

Possible combination of reactor type

Both bubbling fluidized bed and “fast” fluidized bed are available for reactors. Four possible combinations are:

Carbonation reactor	Regenerator(Calciner)
Bubbling	Fast
Fast	Fast

But bubbling bed is considered to be not suitable for the regenerator to avoid hot-spot formation.

Load-following of CaL-process

Requirements:

Regenerator

- Heat supply to decompose $CaCO_3$ to CaO
- Gas supply to transport particles to carbonator

Carbonator

- Heat removal from fluidized bed
- Continuous flow (fluidization) of particles under reduced gas feed rate conditions

Load-following of regenerator

●Heat supply

Fuel feed rate and oxygen feed rate are controlled to keep bed temperature.

●Solid transportation

Staged gas feed and recirculation of flue gas (CO_2) can control the transportation rate of solids to carbonator.

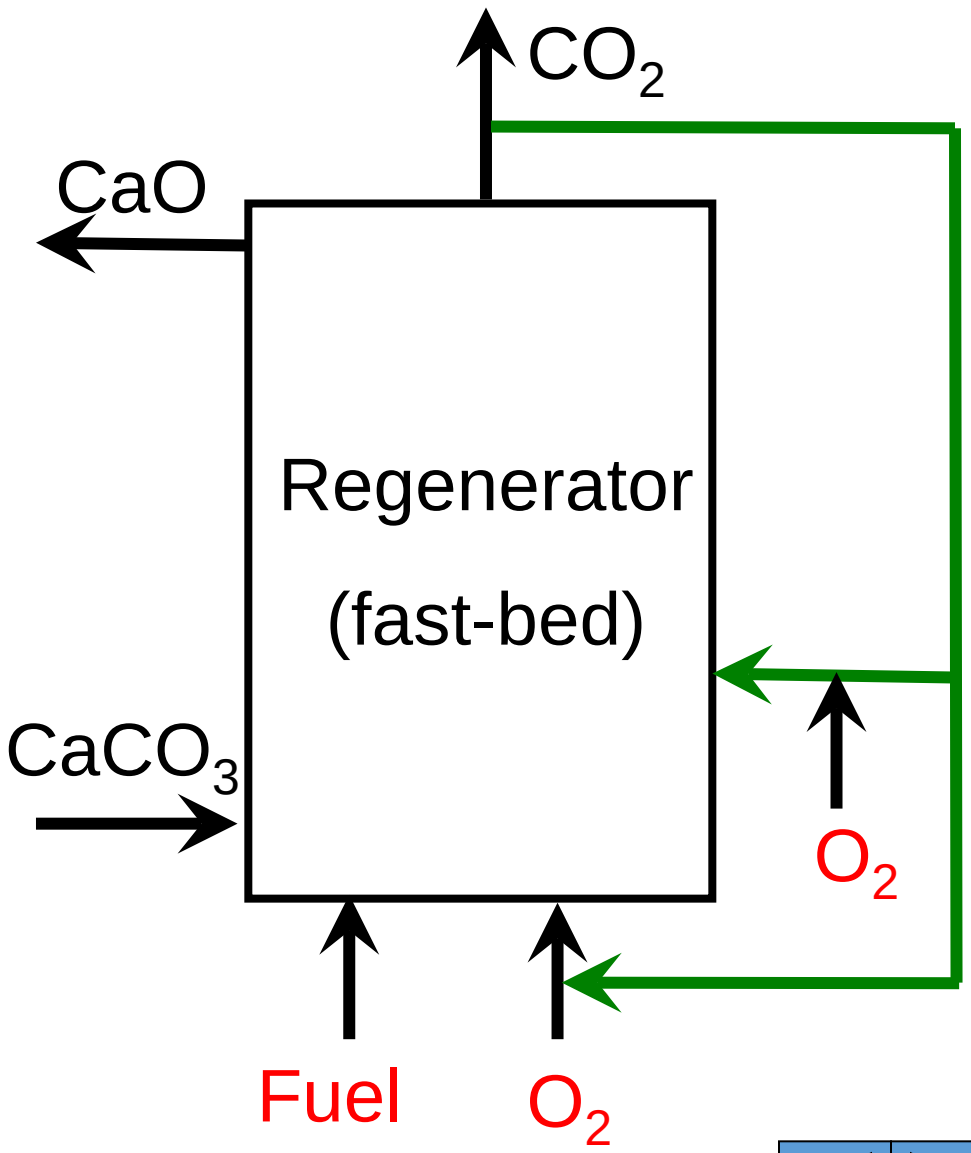

Load-following of carbonator

Requirements:

- Heat removal from fluidized bed

- Gas supply for continuous flow of particles

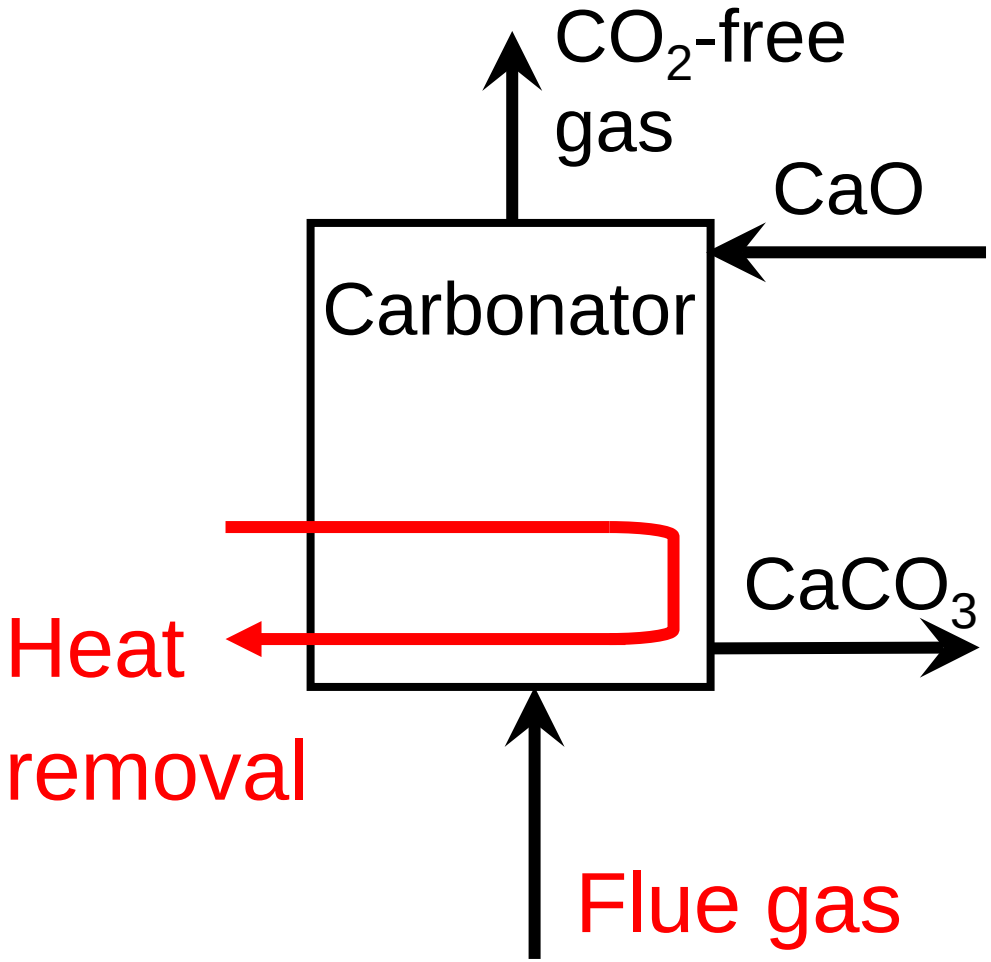

Load-following of fast-bed carbonator

<u>Heat removal by wall (wing-wall) and FBHE</u>

- Control of solid flow to FBHE
- Flue gas recycle to entrain solids to upper part

<u>Solid extraction</u>

- From bottom of bed or from return-leg

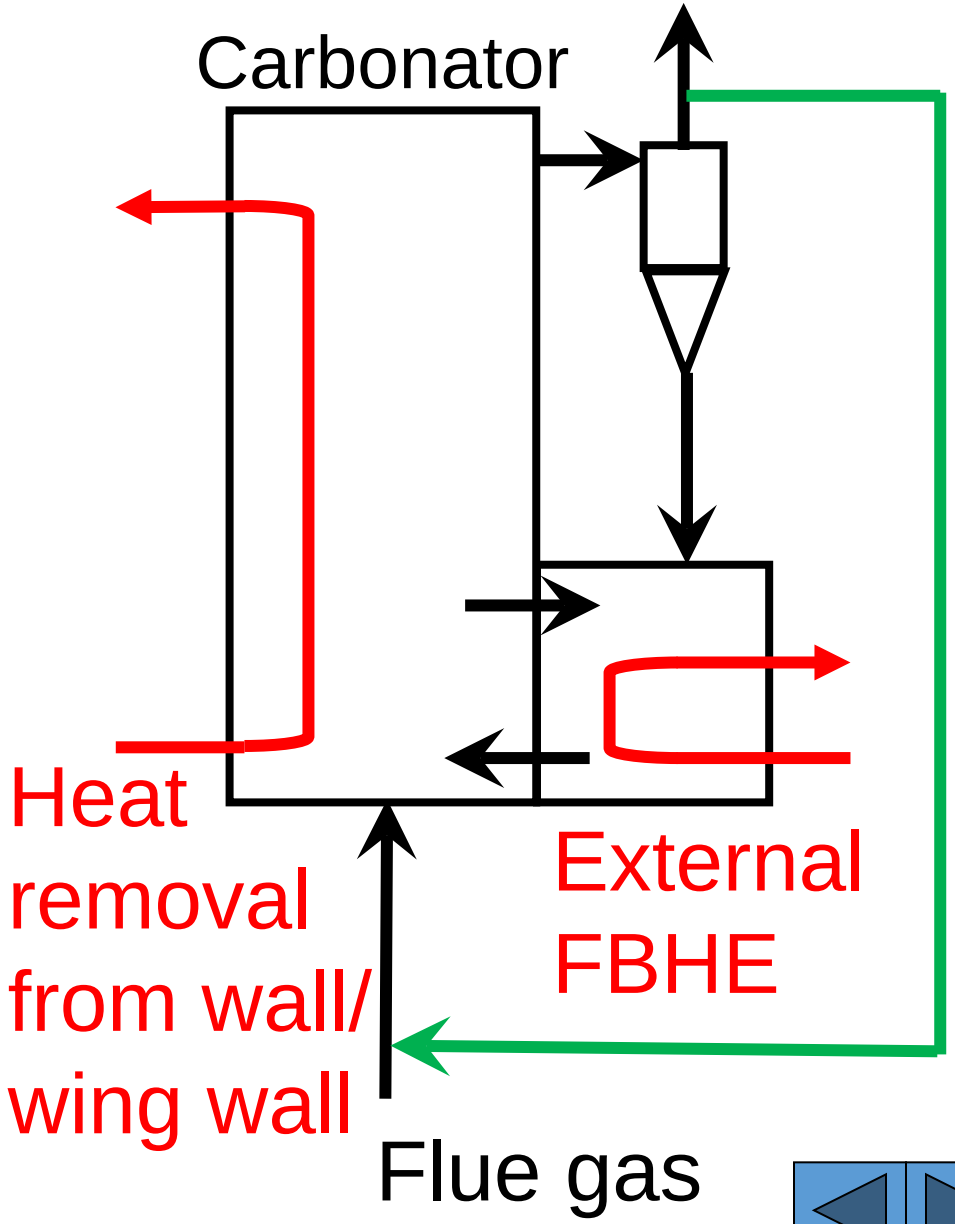

Load-following of bubbling bed carbonator

Heat removal by immersed tubes

- Bed height change (P-BFBC) (gas vel. change?)
- Bed slumping (A-BFBC)

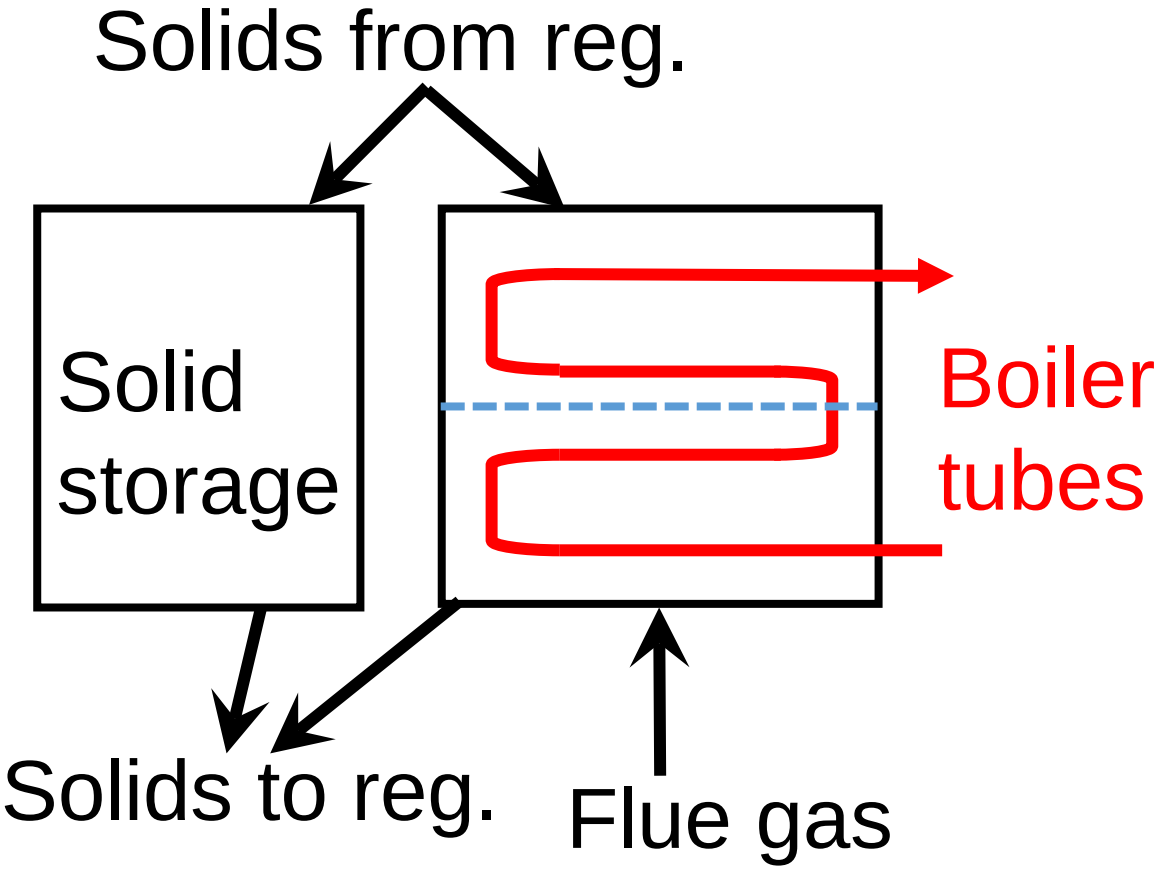

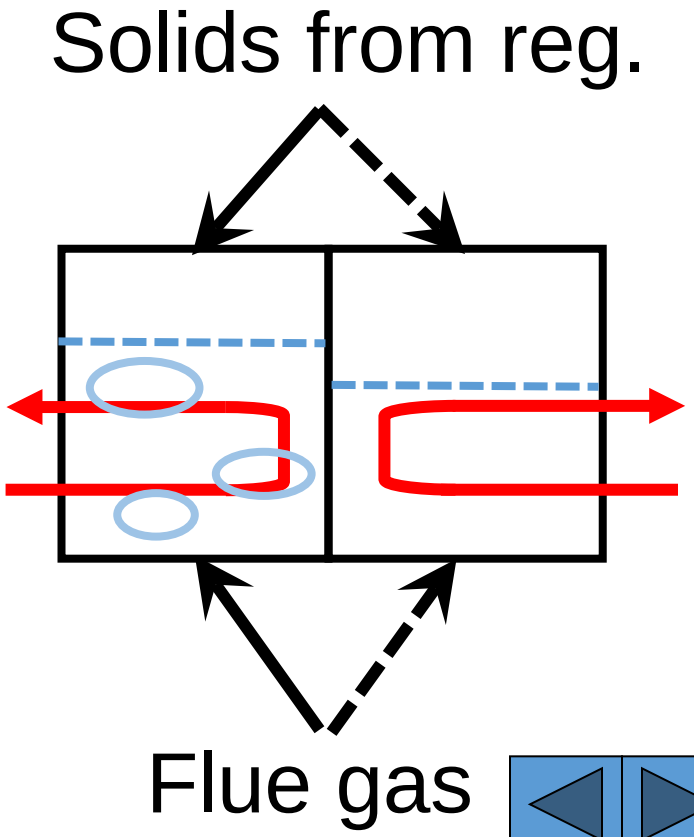

Difference between carbonator and combustor

BFB Combustor

- Stagnant bed material
- Uniform distribution of fuel feed needed
- Wide size distribution

BFB Carbonator

- Bulk flow of bed material (CaO)
- No fuel feed
- Narrow S.D.

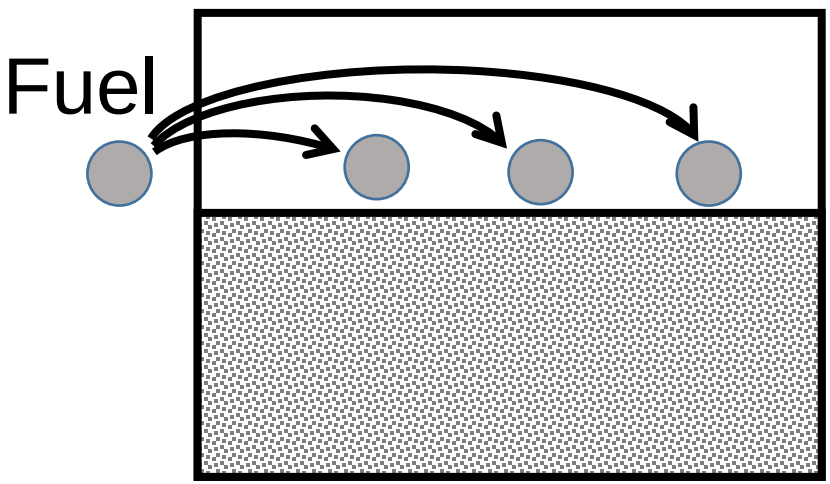

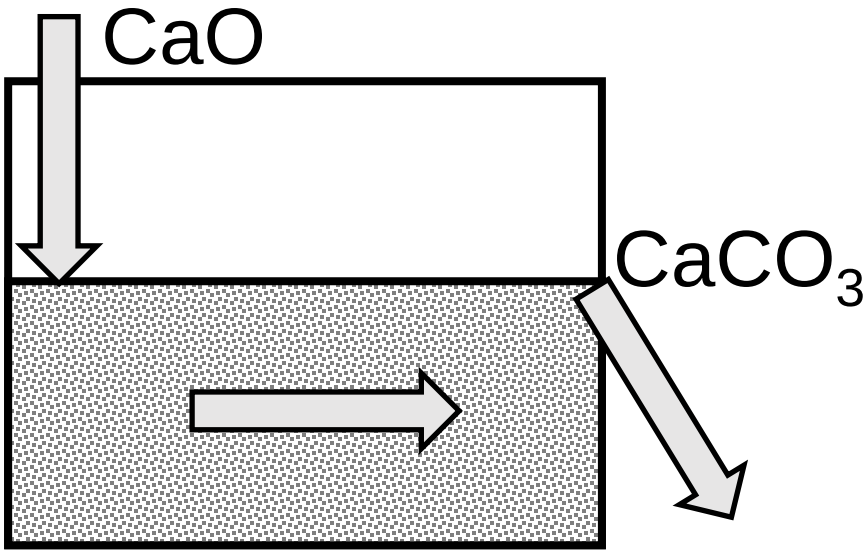

BFB-carbonator with bed slumping

- Divided into several “cells”
- Uniform distribution of solid flow required
- “Plug flow” for solid flow in each cell
  →reaction / heat release distribution
- “Complete mixing” for solid flow in each cell
  →wide residence time distribution of solids

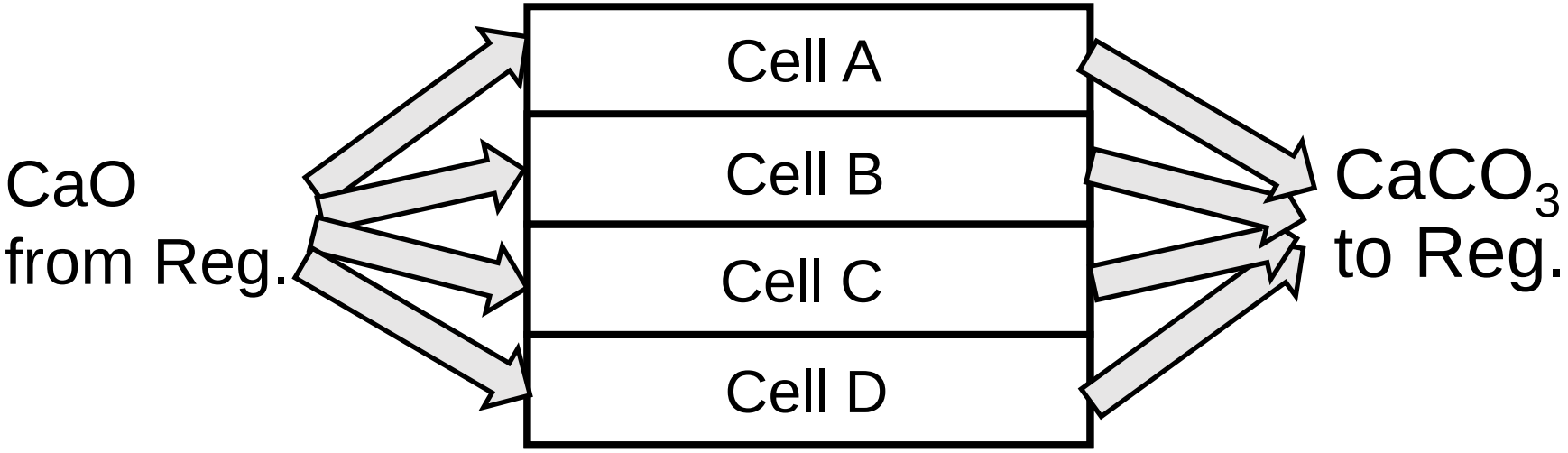

Top view

Fast bed or bubbling bed?

Fast bed

- High gas velocity

→Small cross sectional area (excluding FBHE)

- Good G/S contact
- Load following ability by solid flow to FBHE or particle entrainment to upper part wall / wing wall heat transfer surfaces

Bubbling bed

- High heat transfer rate
- Slow gas velocity

→less attrition loss (research needed)

- Load following ability by bed slumping (research needed)

Conclusion

Load following ability is necessary for CaL process.

For the choice of reactor type for carbonator, it is necessary to consider

- Gas solid contact efficiency to attain CO_2 capture
- Arrangement of heat transfer surface to remove heat
- Load following ability (change in gas feed rate)

Bubbling bed can be a candidate because some problems with BFB combustion are expected to be not so disadvantageous for BFB carbonator.